Substance Abuse and Mental Health Services Administration
SAMHSA
1 Choke Cherry Road • Rockville, MD 20857
www.samhsa.gov • 1-877-SAMHSA-7 (1-877-726-4727)

Creating a Trauma-Informed Criminal Justice System for Women: WHY AND HOW

Why do far too many women keep cycling through the criminal justice system, wrestling with persistent mental health and substance abuse issues, unable to find a footing in the community and reclaim their lives?

An increasing body of evidence tells us that the overwhelming majority of women in jails and prisons have experienced trauma that has scarred their minds and hearts. They may have survived rape, assault, or childhood sexual abuse, or they may have witnessed violence done to others. Trauma can result in physiological changes in the way our brains respond to danger, especially when the trauma is repeated. It has also been linked to depression, suicidal tendencies, chronic anxiety, hostility, impaired ability to relate to others socially, and many other serious consequences in personal life.

The experiences that trauma survivors have in the criminal justice system, far from leading them to positive changes in their lives, often add new trauma and deepen their wounds. Many of these women will never be able to break out of the narrow trajectory that constricts their futures unless the justice system and their communities can help them to focus on the root problem: trauma, its lasting effects in human lives, and the need to begin the healing process. Here is what we know:

- According to most estimates, trauma is an almost universal experience among people who use public mental health, substance abuse and social services, as well as people who are justice-involved or homeless.[1]
- While individuals with trauma histories are the majority of those served in behavioral healthcare and criminal justice systems, trauma survivors are not likely to seek treatment specifically for trauma-related symptoms.[2]
- Justice-involved women are more likely to have experienced physical and sexual abuse than male offenders or women in the general population.[3]

Across the country, many communities have shown a new awareness of these women and their trauma histories, and they have responded by developing trauma-informed criminal justice systems to better serve these women. The goal for these systems is to make specific trauma-informed changes in order to avoid retraumatizing women and making their problems worse. They may also offer interventions that give women a chance to understand the impact of trauma in their lives, heal, and learn to thrive despite past wounds. Many communities find that the upfront costs of these interventions – however difficult in a context of fiscal belt-tightening – pay off in savings and other benefits.

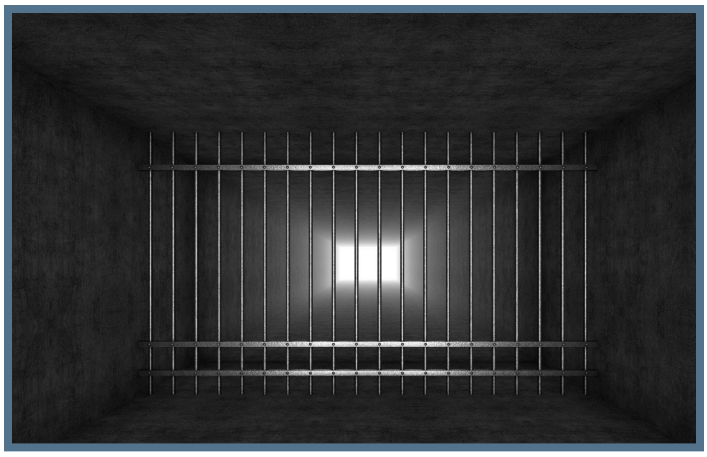

▲ *For trauma survivors behind bars, hope does not come easily. The good news is that communities can offer them viable options that renew hope and encourage recovery.*

In developing effective trauma-informed systems, these communities focus on five "intercept" points at which women may come in contact with the criminal justice system, each of which offers an opportunity to begin recovery. **This "Sequential Intercept Model" has been shown to benefit women, the criminal justice system, and other service systems by:**

- Enabling women to recognize the impact of trauma in their lives, get support, and move ahead toward healing;
- Helping women lead stable lives and restore relationships with children in the system;
- Reducing recidivism and related costs, such as foster care; and
- Enabling women who are incarcerated to reduce conflict with other inmates, as well as with prisoners and guards.

DRAFT

FIVE INTERCEPT POINTS: Openings for Change

Is your community ready for change? Many are.

These communities are looking for opportunities to help women recognize the impact trauma has had in their lives and get the support they need to heal. They seek to release individuals from the burden of carrying the effects of trauma with them throughout their lives. They also want to ease the financial burden on communities caused by repeated arrests, court appearances, ineffective treatment, and confinements, as well as the costs associated with caring for the children of incarcerated women.

Five intercept points where trauma survivors can encounter the criminal justice system – beginning or continuing their involvement in the system – also offer opportunities to help them find a different path. Of course, the earlier the system identifies these women and offers help, the greater the chance of success – both for assisting the women themselves and for relieving the long-term strain on community resources.

It is important to remember that, although the subject is beyond the scope of this short guide, traumatic experiences that occur in childhood can cause problems throughout adult life, and abused children may themselves become abusers. As communities address the consequences of trauma for women involved with the criminal justice system, it is also a good time to improve parenting efforts, strengthening the community's ability to prevent and address trauma in the lives of children.

▼ *Each of these five intercept points gives communities an opportunity to offer trauma survivors involved with the criminal justice system a chance to reclaim healthy lives.*

SEQUENTIAL INTERCEPT MODEL

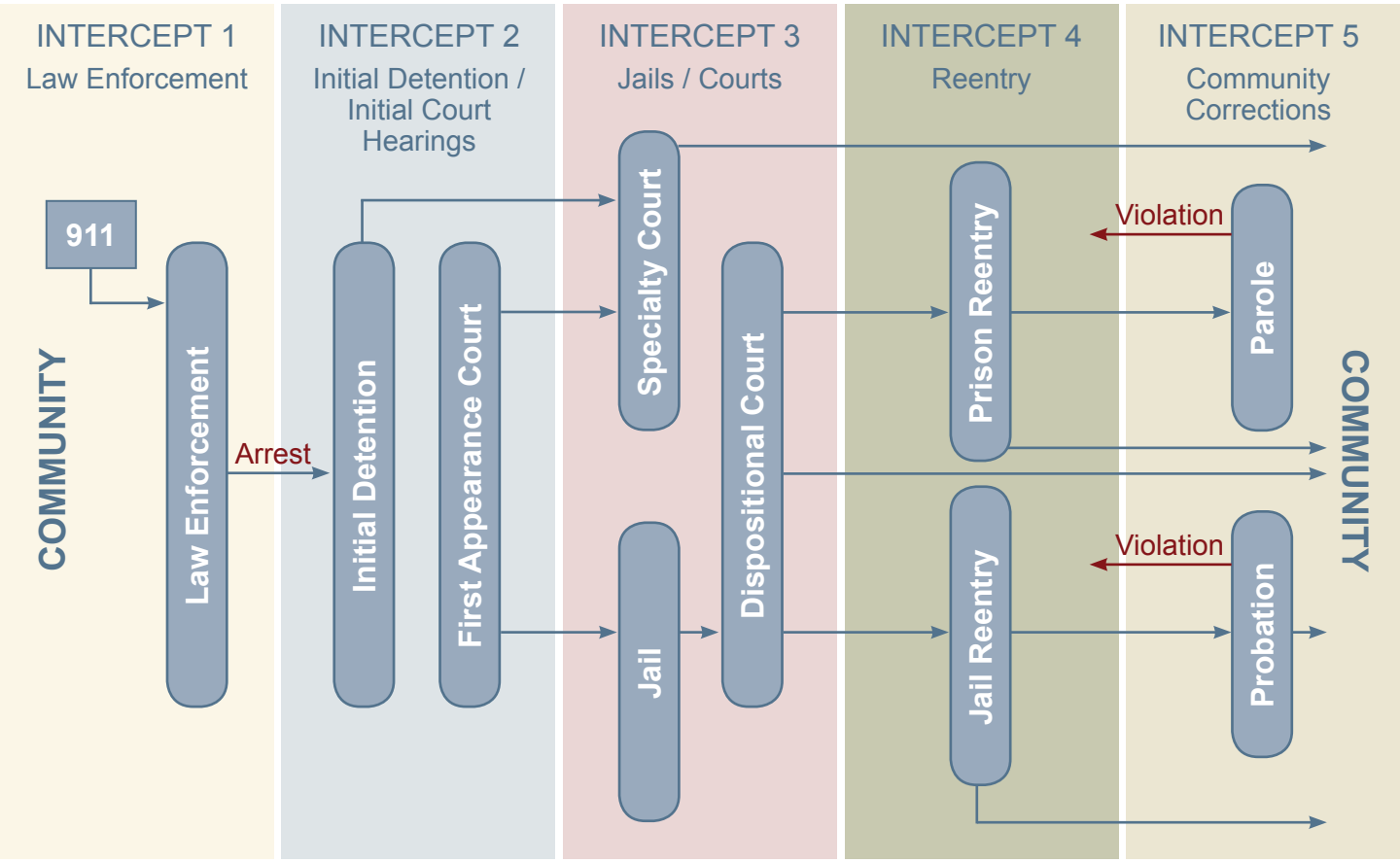

FIVE INTERCEPT POINTS: Openings for Change

DRAFT

INTERCEPT 1: Law Enforcement and Emergency Services

I was seriously tripping [having a flashback] when I got arrested. The officer put his hands on me, and I went right back to the last time I was raped. And I fought like hell….Ever since I've been here, I can't trust anyone. If someone moves towards me too fast, I'll just go off. And then I have nightmares all night long.

– 21-year old woman detained in urban jail[4]

We need to build in mechanisms that make the drop-off options work [for individuals eligible for diversion to mental health services as an alternative to arrest]. If the transfer to mental health services is ineffective or takes too much time, officers will go back to arresting and jailing.

– Lt. Jeffry Murphy, Chicago Police Department Crisis Intervention Team

The Opportunity: A call comes in to a local 911 system: a woman is creating a disturbance downtown. She is screaming and threatening the people who come near her. The woman in question is a trauma survivor who uses drugs to escape from agonizing memories. What happens next?

In some communities, the woman is arrested and pleads out her charges; she may become a convicted felon. The strip searches, controlling environment, violations of privacy, and often chaotic and confrontational social context may retraumatize the woman. The behaviors she has adopted to deal with trauma become even more ingrained.

In other communities, where prearrest diversion is possible, the story can be different. An officer recognizes that the woman's behavior may indicate trauma or other behavioral health issues. He or she takes the woman to a mental health crisis center, where she is evaluated and referred for treatment. Alternatively, the officer may contact a mobile crisis team from the public mental health system or call for specially-trained officers who arrive on site to help handle the situation.

How To Do It: Prearrest diversion programs require collaboration and planning involving behavioral health providers, emergency services, and law enforcement. **Key elements include:**

- Involve all relevant stakeholders in planning a system that works for the community, including advocacy groups;
- Train officers, 911 dispatchers, and others on why the new system is being used and how to use it;
- Capture data to determine how well the system is meeting community goals.

INTERCEPT 2: Arrest and Initial Hearing

In a drug treatment court, the culture of the courtroom has to be different. Judges talk directly to the women in the programs, and the women are allowed to approach the bench. We tell the officers to be supportive – not, for example, jingling the handcuffs to remind them who is in charge. We applaud the women when they are successful.

– Honorable Jo Ann Ferdinand, Judge, Brooklyn Treatment Court

The Opportunity: Despite prearrest diversion programs, women with trauma histories will be arrested. In fact, most women involved with the criminal justice system do have histories of trauma. Postarrest diversion programs provide a second opportunity to address the underlying issue of trauma by providing behavioral health treatment.

Communities that use this option typically have professionals screen women for trauma and mental health and/or substance abuse issues prior to the initial hearing. This may occur in the jail, an intake or holding center, or in a specialty court. Discussing traumatic events requires trust and may be accompanied by strong emotions, so special training in asking questions about "what happened to you?" is essential.

Based on the recommendations of the behavioral health professionals and the nature of the crime, which are presented at the hearing, the judge may choose to refer the woman for mandated treatment. Treatment may be a condition of deferred prosecution, deferred sentencing, or probation.

Continued on next page.

DRAFT

INTERCEPT 2: Arrest and Initial Hearing *(Continued from page 3)*

How To Do It: Postarrest diversion programs are designed cooperatively by courts and the behavioral health system.
Key elements include:

- Make certain the behavioral health intake and evaluation staff are trauma-informed and understand trauma-specific treatment options.
- Arrange for behavioral health professionals to conduct screening and assessment and advise the court. They may be employed by the court or provided by a collaborating public mental health system.
- Develop linkages to appropriate community services where women can receive treatment.
- Ensure access to trauma-informed peer support.
- Provide cross-disciplinary training for treatment providers and court officers.

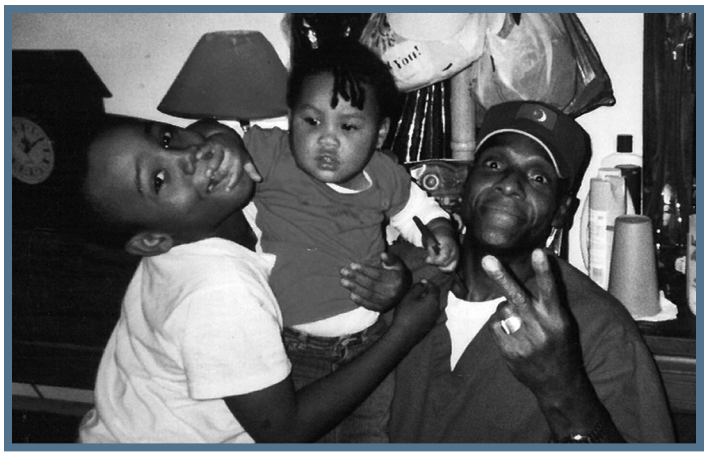

▲ *Asked to make a photograph of something that inspires her to recover, a trauma survivor took this picture of her son, granddaughter, and husband "just goofing off." With thanks to Brooklyn Treatment Court.*

INTERCEPT 3: Jails and Prisons; Specialty Courts

"All it took to begin my recovery was for someone to ask me, 'what happened to you?' who was prepared to listen to the answer."

– Tonier Cane, trauma survivor and Team Lead for the National Center for Trauma-Informed Care

The Opportunity: When a woman who has experienced trauma enters jail or prison, she often encounters daily reminders of what she has been through (sometimes called "triggers"). Strip searches, room searches that inevitably involve inspecting personal items, cuffs or restraints, isolation, sudden room changes, yelling and insults – these experiences keep old wounds open, prevent healing and change, and may invoke old patterns of self-protective responses (including violent outbursts) that only make things worse.

Whether or not they offer therapeutic interventions to help women recover, many jails and prisons have discovered the benefits of "universal precautions" that minimize the likelihood of retraumatizing the woman. Examples include telling her in advance what will happen in a strip search so she has a sense of control, avoiding the use of restraints or seclusion whenever possible, and learning to "ground" a frightened and potentially violent woman by speaking her name calmly and firmly. Warden Carole Dwyer of the Rhode Island Department of Corrections reports that such changes have resulted in a decrease in physical violence within Rhode Island's women's prisons.

Declining Incident Reports in a Trauma-Informed State Corrections System

PHYSICAL VIOLENCE	2007	2008	2009
Inmates assaulting inmates	22	9	6
Inmate fights	38	28	4
Inmates assaulting staff	13	4	2
Use of force	24	10	5

Rhode Island Department of Corrections

Continued on next page.

DRAFT

INTERCEPT 3: Jails and Prisons; Specialty Courts *(Continued from page 4)*

When correctional officers were trained in the Rhode Island system, administrators showed up to make it clear we were making these changes for them as well as for the women. Officers need to know that some inmate behavior is an adaptation that stems from trauma and that there are things they can do to help a woman "chill" when something sets off the alarms. They actually understand this better than the psychologists. They don't need clinical language to "get" it.

– Carol Dwyer, Warden, Rhode Island Department of Corrections

Many special programs and interventions are available within correctional systems. A few programs, designed for trauma survivors with young children, help women parent their children and avoid losing them to foster care. Correctional systems may also offer education and therapy to help women recognize the impact of trauma in their lives and choose different strategies to cope with its effects.

How To Do It: Communities can take a number of steps to address trauma among incarcerated women. **For example:**

- Consider establishing a special docket court to review cases of women with behavioral health issues, including trauma;
- Train personnel who work in jails or prisons to understand trauma and avoid unnecessary retraumatization;
- Ensure that persons who provide therapeutic interventions are trained on best practices in trauma screening and treatment;
- Offer women opportunities to learn about the effects of trauma and choose alternative behaviors.

INTERCEPT 4: Discharge Planning: Reentry to Community from Jails or Prisons

The Opportunity: When prisons and jails release women who have experienced trauma back into the community – women who often have trauma-related mental health and substance abuse issues – it is the rare facility that offers them a safe bridge back to community life. Few have plans in place that connect them with community treatment providers who are accessible to ex-offenders, financially and geographically, and who are ready and willing to assist them. All too often, women reenter their communities with a 7-day supply of psychiatric medication and a list of outdated telephone numbers and contacts. Worse, they are commonly met at the gate by drug dealers and others who have exploited them in the past. These "toxic connections" are eager to welcome them back to exactly the kind of life that kept them boxed in in the past, with no clear path to recovery. For a woman who sees no other options, they may be all she has. This can change.

Correctional systems across the country are finding that the extra effort that goes into meaningful planning for this transition pays off by reducing the cost to the community of new crimes and incarcerations, and by increasing the woman's ability to reclaim a fulfilling life, perhaps even reuniting with children who had been placed in foster care.

How To Do It: Successful transitional programs begin before the woman is released and ensure that the supports she needs are coordinated, especially over the critical first few months following release. Programs are coordinated between correctional system representatives, including those who have provided assessment and counseling, and providers in the community (typically including substance abuse, mental health, housing, and employment, at a minimum).

Some elements of programs that are working well include the following:

- Develop release plans for women recovering from trauma that address any mental health and substance abuse issues, help her access benefits, and provide for safe housing;
- Design "inreach" programs in which representatives of community services meet with women prior to their release to explain their services and begin to coordinate care;
- Have a supportive peer meet the woman on release to help her become established in a new setting, ideally with a little shopping money to buy essentials;
- Ensure that records and information needed by providers are transferred with the woman's permission; and
- Provide for continued use of prescribed psychiatric medications (abrupt discontinuation of medication can contribute to relapse).

DRAFT

INTERCEPT 5: Parole or Probation

The Opportunity: When women are released on parole or on probation, they face choices daily that can either help to establish a healthier life or signal a return to familiar, and potentially destructive, routines. Parole and probation officers represent the interests of the community, balancing their legal and surveillance roles with their roles as problem solvers. A strong and positive relationship with an officer who can reinforce faltering connections with stabilizing forces in the community can make a difference. This is only likely if the officer is able to empathize with each individual's potential pitfalls, identify new options when planned resources fail to deliver, and firmly befriend the spirit of hope in each trauma survivor.

How To Do It: Parole or probation officers can play an important role in ensuring that women can and do access the services they need to reestablish their lives in the community. However, many of them are unaware of the role trauma can play in women's lives, and most have such high case loads that they cannot spend the time needed to step in and address barriers to effective treatment.

Communities have found the following to be helpful:

- Concentrate supervision in the critical weeks following release, adjusting strategies when needed;
- Establish policies and procedures that ensure the officers have the information they need about each woman's release plan and its rationale;
- Provide training for parole or probation officers to help them work effectively with trauma survivors, increasing the likelihood of compliance with terms of parole or probation;
- Ensure that these officers are aware of and connected with community resources that can help women recover from trauma, mental health issues, and substance abuse;
- Fund and reward community services that welcome and support ex-offenders;
- Consider developing officers who specialize in meeting the needs of persons with substance abuse and mental health issues; and
- Reduce case loads to allow more time for advocacy, relationship building with community service providers, and active supervision.

TO LEARN MORE.....

The GAINS Center

Through the Substance Abuse and Mental Health Services Administration's Center for Mental Health Services (CMHS), the U.S. Department of Health and Human Services offers the technical assistance through the GAINS Center. The center's website offers resources on diversions to address mental health issues and effective practices.

http://www.gainscenter.samhsa.gov/

National Center for Trauma-Informed Care

CMHS also sponsors a technical assistance center focused specifically on trauma-informed care. At this website you can find resources on trauma, its effects, programs and strategies that help trauma survivors recover, and information on training.

http://mentalhealth.samhsa.gov/nctic/

[1] National Center for Trauma-Informed Care (NCTIC). Trauma-Specific Interventions. Available at http://mentalhealth.samhsa.gov/nctic/trauma.asp#interventions

[2] Schreiber V, Renneberg B & Maercker A (2009). Seeking psychosocial care after interpersonal violence: an integrative model. Violence Vict.;24(3):322-36

[3] Bureau of Justice Statistics. (1999). Prior abuse reported by inmates and probationers (NCJ 172879). Washington, DC: U.S. Department of Justice.

[4] Hatton, Diane C., and Fisher, Anastasia, Editors (2009), p. 30. Women Prisoners and Health Justice: Perspectives, Issues, and Advocacy for an International Hidden Population. Beth Ritchie, "Chapter 2. Challenges Incarcerated Women Face as they Return to Their Communities: Findings from Life History Interviews." Oxon, UK: Radcliff Publishing Ltn.

DRAFT